WIDE CIRCULATION DRAFT

BUREAU OF INDIAN STANDARDS **MTD 16 22233**

(Not to be reproduced without the permission of BIS or used as an Indian Standard) **April 2023**

Draft Indian Standard

SPECIFICATION FOR MACHINING ALLOWANCES AND TOLERANCES FOR OPENN DIE STEEL FORGINGS PART 1 CARBON AND LOW ALLOY STEEL FORGINGS

[*first revision* of IS 10604 Part 1]

ICS 77.140.85;77.140.45

Alloy Steels and Forging Sectional Committee, **MTD 16**	Last date of comments **04 May 2023**

Alloy Steels and Forging Sectional Committee, MTD 16

FOREWORD

This Indian Standard was adopted by the Bureau of Indian Standards, after the draft finalized by the Alloy Steels and forging Sectional Committee had been approved by the Metallurgical Engineering Division Council.

This standard was first published in 1983. This revision has been brought out to bring the standard in the latest style and format of the Indian Standards.

This standard is published in two parts. The other part in the series is:

Part 2 High alloy Steel forgings

For the purpose of whether a particular requirement of this standard is complied with the final value, observed or calculated, expressing the result of a test or analysis, shall be rounded off in accordance with IS 2 : 2022 'Rules for rounding off numerical values (*second revision*)'. The number of significant places retained in the rounded off value should be the same as that of the specified value in this standard.

1. SCOPE

This standard (Part 1) covers the machining allowances and tolerances for open die steel forgings made from carbon and low alloy steels.

2. MACHINING ALLOWANCES AND TOLERANCES

These shall be as given in Tables 1 to 7.

TABLE 1 MACHINING ALLOWANCES AND FORGING TOLERANCES ON CROSS SECTIONS FOR FREE- FORGED PLAIN OR STEPPED SHAFTS

All dimensions in millimetres.

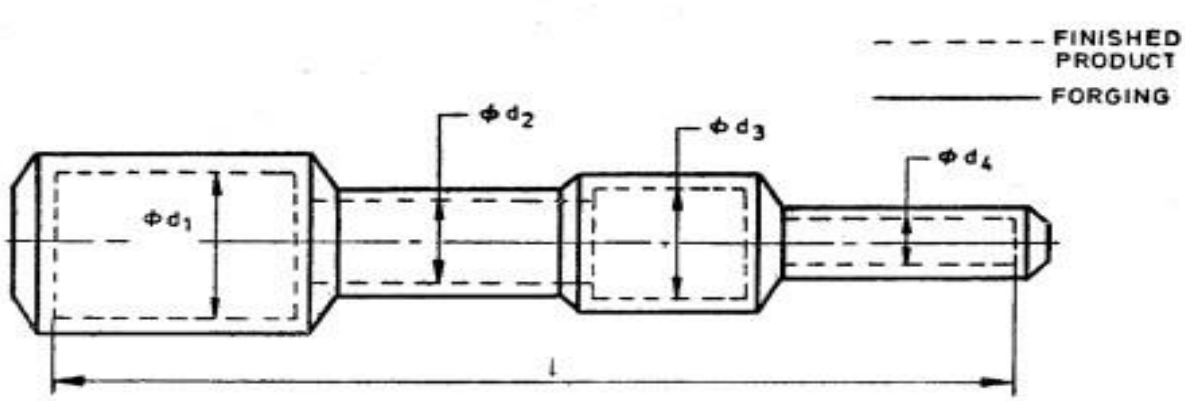

LENGTH OF THE FINISHED PRODUCT, *l*		DIAMETER *d* OF THE FINISHED PRODUCT														
FROM	TO	OVER → UP TO→	— 30	30 50	80 120	120 180	180 250	250 315	315 400	400 500	500 630	630 800	800 1000	1000 1250	1250 1600	1600 2000
		ALLOWANCES ON SECTION														
	250	7±2	7±2	9±3	12±4	15^{+5}_{-3}	17^{+7}_{-5}	—	—	—	—	—	—	—	—	—
251	400	9±2	8±2	10±3	13±4	16^{+5}_{-3}	20^{+7}_{-5}	21^{+9}_{-6}	—	—	—	—	—	—	—	—
401	630	9±2	10±2	12±3	14±4	17^{+5}_{-3}	20^{+7}_{-5}	22^{+9}_{-6}	28^{+12}_{-8}	31^{+15}_{-10}	35^{+19}_{-12}	—	—	—	—	—
631	1000	10±2	12±2	14±3	16±4	19^{+5}_{-3}	21^{+7}_{-5}	24^{+9}_{-6}	29^{+12}_{-8}	32^{+15}_{-10}	36^{+19}_{-12}	40^{+24}_{-15}	46^{+30}_{-20}	55^{+37}_{-25}	—	—
1001	1600	12±2	13±2	14±3	16±4	20^{+5}_{-3}	22^{+7}_{-5}	24^{+9}_{-6}	30^{+12}_{-8}	32^{+15}_{-10}	37^{+19}_{-12}	42^{+24}_{-15}	45^{+30}_{-20}	57^{+37}_{-25}	65^{+45}_{-30}	—
1601	2500	14±2	15±3	16±4	18±5	23^{+6}_{-4}	26^{+8}_{-6}	28^{+10}_{-7}	30^{+14}_{-9}	33^{+18}_{-11}	39^{+22}_{-13}	43^{+28}_{-17}	48^{+35}_{-20}	60^{+43}_{-25}	72^{+52}_{-30}	85^{+62}_{-35}
2501	3150	14±3	16±3	17±4	19±6	24^{+6}_{-4}	27^{+8}_{-6}	29^{+10}_{-7}	31^{+14}_{-9}	35^{+18}_{-11}	41^{+22}_{-13}	44^{+28}_{-17}	50^{+35}_{-20}	62^{+44}_{-25}	76^{+54}_{-30}	90^{+65}_{-35}
3151	4000	15±3	17±3	18±4	20±6	24^{+6}_{-4}	28^{+10}_{-6}	30^{+10}_{-7}	32^{+14}_{-9}	37^{+18}_{-11}	43^{+22}_{-13}	46^{+28}_{-17}	52^{+35}_{-20}	62^{+44}_{-25}	76^{+54}_{-30}	90^{+65}_{-35}
4001	5000	—	—	19±5	21±6	25^{+6}_{-4}	28^{+10}_{-6}	30^{+12}_{-7}	33^{+16}_{-9}	37^{+20}_{-11}	45^{+25}_{-13}	50^{+30}_{-17}	55^{+40}_{-20}	65^{+50}_{-25}	78^{+61}_{-32}	—
5001	6300	—	—	—	22±8	26^{+6}_{-4}	29^{+10}_{-7}	31^{+12}_{-8}	34^{+16}_{-9}	39^{+20}_{-12}	48^{+25}_{-14}	52^{+32}_{-21}	58^{+40}_{-21}	67^{+50}_{-26}	82^{+61}_{-32}	—
6301	8000	—	—	—	—	26^{+7}_{-5}	29^{+11}_{-7}	32^{+12}_{-8}	35^{+16}_{-10}	42^{+20}_{-12}	50^{+25}_{-14}	54^{+32}_{-21}	60^{+40}_{-21}	70^{+50}_{-26}	85^{+61}_{-32}	—
8001	10000	—	—	—	—	26^{+7}_{-5}	30^{+11}_{-7}	33^{+14}_{-8}	36^{+18}_{-10}	45^{+23}_{-12}	53^{+28}_{-14}	57^{+36}_{-18}	62^{+45}_{-21}	75^{+55}_{-26}	—	—
10001	12500	—	—	—	—	—	41^{+11}_{-7}	45^{+14}_{-8}	49^{+18}_{-10}	54^{+23}_{-12}	58^{+28}_{-14}	62^{+36}_{-18}	66^{+45}_{-21}	—	—	—
12501	16000	—	—	—	—	—	48^{+11}_{-7}	52^{+14}_{-8}	56^{+14}_{-10}	60^{+23}_{-12}	67^{+28}_{-14}	71^{+36}_{-18}	75^{+45}_{-21}	—	—	—

NOTE — Machining allowances and forging tolerances are:

a) applicable to both circular and rectangular shafts, and

b) upper limit of tolerance will be 40 percent more for stepped shafts.

TABLE 2 MACHINING ALLOWANCE AND FORGING TOLERANCES ON LENGTH FOR FREE-FORGED PLAIN OR STEPPED SHAFTS (PRESS FORGINGS)

All dimensions in millimetres.

LENGTH ‘l’ OF THE FINISHED PRODUCT, mm

DIAMETER ‘*d*’ OF THE FINISHED PRODUCT	OVER→ UP TO→	— 500	500 1000	1000 1600	1600 2500	2500 3750	3750 5400	5400 7500	7500 10000	10000 13000	13000 16000
	ALLOWANCE ON LENGTH										
Up to 500		30^{+15}_{-10}	35^{+20}_{-10}	40^{+25}_{-15}	45^{+30}_{-20}	50^{+35}_{-25}	60^{+40}_{-30}	70^{+45}_{-35}	80^{+50}_{-40}	90^{+55}_{-45}	100^{+60}_{-50}
501 to 1000		35^{+20}_{-10}	40^{+5}_{-15}	45^{+30}_{-20}	50^{+35}_{-25}	60^{+40}_{-30}	70^{+45}_{-35}	80^{+50}_{-40}	90^{+55}_{-40}	100^{+60}_{-50}	110^{+65}_{-55}
Above 1000		40^{+25}_{-15}	35^{+30}_{-20}	50^{+35}_{-25}	60^{+40}_{-30}	70^{+45}_{-35}	70^{+45}_{-35}	90^{+55}_{-45}	100^{+60}_{-50}	110^{+65}_{-55}	120^{+70}_{-60}

NOTE — Machining allowances and forging tolerance are;
a) applicable for both circular and rectangular shafts, and
b) upper limit of tolerance will be 40 percent more for stepped sections.

TABLE 3 MACHINING ALLOWANCES AND FORGING TOLERANCES ON LENGTH FOR FREE-FORGED PLAIN OR STEPPED SHAFTS (HAMMER FORGINGS)

All dimensions in millimetres.

DIAMETER ‘*d*’ OF THE FINISHED PRODUCT	LENGTH ‘l’ OF FINISHED PRODUCT, mm				
	ALLOWANCES ON LENGTH				
	OVER – Up to 500	500 1000	1000 1600	1600 2500	2500 3750
Up to 100	20^{+8}_{-4}	25^{+10}_{-5}	30^{+15}_{-8}	35^{+20}_{-10}	40^{+25}_{-15}
101 to 250	30^{+15}_{-8}	35^{+20}_{-10}	40^{+25}_{-15}	45^{+30}_{-20}	50^{+35}_{-25}

NOTE – Machining allowances and forging tolerances are;
a) applicable for both circular and rectangular shafts, and
b) Upper limit of tolerance will be 40 percent more for stepped sections.

TABLE 4 FORGING ALLOWANCE AND TOLERANCE ON FLAT SECTIONS

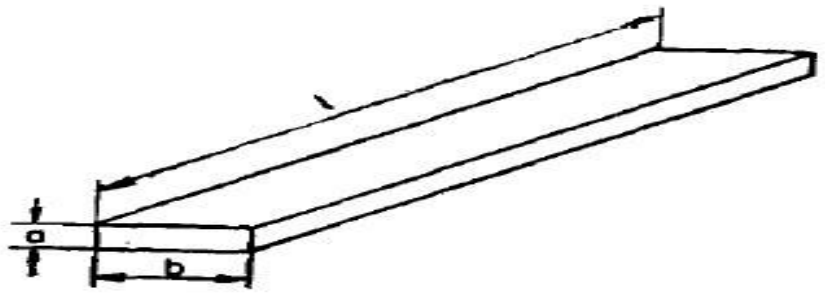

A, b, and l are machined sizes

$\frac{a}{b}$	FORGING ALLOWANCE AND TOLERANCE ON *a* AND *b*

≤ 1:7	Normal working allowance and tolerance according to Table 1, 2 and 3 for size *a* and *b*
≤1:8	For Size *a*, Increase allowance and tolerance by 15 percent
≤1:9	For Size *a*, Increase allowance and tolerance by 30 percent
≤1:10	For Size *a*, Increase allowance and tolerance by 75 percent
> 1:10	To be decided by the technologist on individual basis
NOTE – Forging allowance and tolerance on *a* and *b* will be determined separately according to *a* and *l* and *b* and *l* respectively.	

2.2 Additional forging allowance due to eccentricity in stepped shafts including rolls shall be calculated as give in Fig 1. The value so calculated shall be added to the diameter when $l>8d_1$ and $d_1/d_3>1.6$.

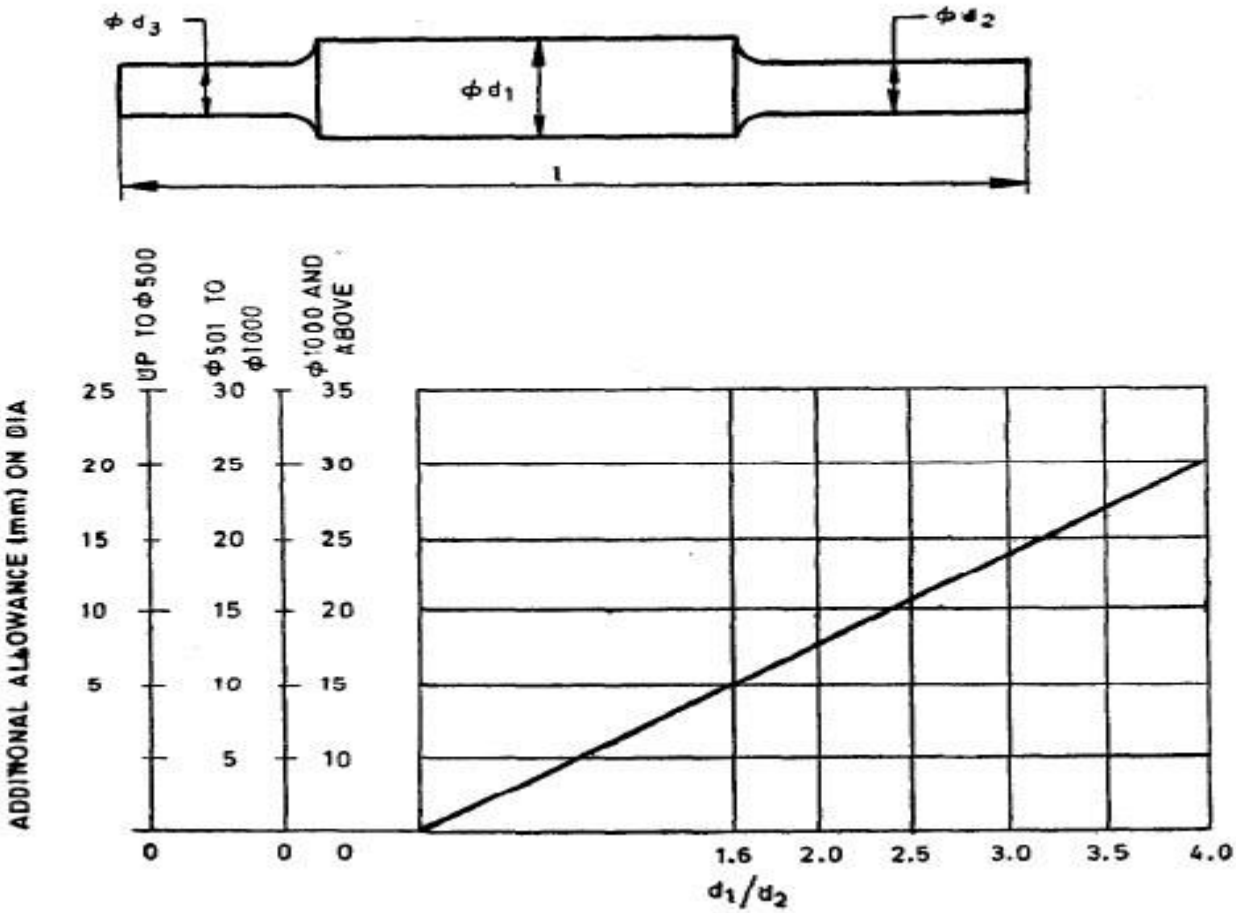

FIG. 1 METHOD OF CALCULATING ADDITIONAL FORGING ALLOWANCE DUE TO ECCENTRICITY IN STEPPED SHAFTS INCLUDING ROLLS

3. TECHNOLOGICAL INSTRUCTION FOR FORGING STEPPED FLANGED AND NECKED SHAFTS

3.1 In case of stepped shafts (round or square) where ration between two adjacent dimensions of any step, for example, d_1/d_2 and d_1/d_3 or d_2/d_3 (Fig 2) ≤1.6 , allowance and tolerance for d_1,d_2, and d_3, l_1, l_2, and l_3 and l will be on the basis of d_1 and l as per Tables 1, 2 and 3.

TABLE 5 MACHINING ALLOWANCE AND FORGING TOLERANCES FOR FREE-FORGED
1. SOLID BLANKS, 2. HOLLOW BLANKS
(where $h \leq d$, $d_1 \leq 1/3\ d$)

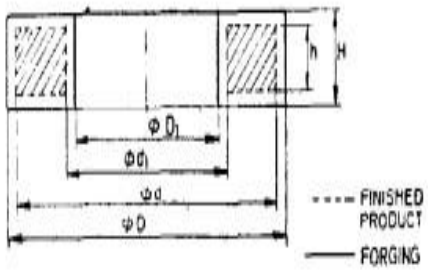

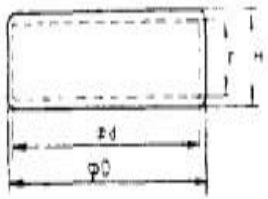

All dimensions in millimetres.

OUTSIDE DIAMETER '*d*' OF THE FINISHED PRODUCT		HEIGHT '*h*' OF THE FINISHED PRODUCT																							
OVER→		—		40		63		100		160		200		250		315		400		500		630		800	
UP TO→ AND INCLUDING		40		63		100		160		200		250		315		400		500		630		800		1010	
		ALLOWANCE ON																							
From	To	*d*	*h*	*d*	*h*	*d*	*h*	*d*	*h*	*d*	*h*	*d*	*h*	*d*	*h*	d	h	d	h	d	h	d	h	d	H
63	100	8 ± 2	7 ± 2	8 ± 2	7 ± 2	9 ± 2	8 ± 2	—	—	—	—	—	—	—	—	—	—	—	—	—	—	—	—	—	—
101	160	8 ± 3	7 ± 2	9 ± 3	8 ± 2	9 ± 3	8 ± 2	10 ± 3	9 ± 3	—	—	—	—	—	—	—	—	—	—	—	—	—	—	—	—
161	200	9 ± 3	8 ± 3	9 ± 3	8 ± 3	11 ± 4	9 ± 3	13 ± 4	12 ± 3	15 ± 4	13 ± 4	—	—	—	—	—	—	—	—	—	—	—	—	—	—
201	250	10 ± 4	9 ± 3	12 ± 4	9 ± 3	14 ± 4	10 ± 4	16 ± 5	14 ± 4	18 ± 5	16 ± 4	20 ± 5	18 ± 5	—	—	—	—	—	—	—	—	—	—	—	—
251	315	12 ± 6	10 ± 4	14 ± 6	10 ± 4	17 ± 6	12 ± 4	20 ± 7	15 ± 5	22 ± 7	18 ± 6	22 ± 7	20 ± 6	24 ± 8	22 ± 7	—	—	—	—	—	—	—	—	—	—

316	400	—	—	16 ± 6	12 ± 4	19 ± 7	13 ± 5	22 ± 8	16 ± 6	24 ± 8	18 ± 6	25 ± 9	20 ± 7	26 ± 10	22 ± 8	27 ± 11	25 ± 9	—	—	—	—	—	—	—	—
401	500	—	—	—	—	22 ± 8	14 ± 6	25 ± 9	18 ± 7	28 ± 10	22 ± 7	29 ± 11	24 ± 8	30 ± 12	25 ± 9	32 ± 12	30 ± 10	35 ± 13	32 ± 11	—	—	—	—	—	—
501	630	—	—	—	—	25 ± 9	17 ± 7	30 ± 10	22 ± 8	32 ± 11	26 ± 8	34 ± 12	30 ± 9	36 ± 13	32 ± 10	37 ± 13	33 ± 10	35 ± 14	34 ± 11	40 ± 15	35 ± 12	—	—	—	—
631	800	—	—	—	—	29 ± 10	21 ± 8	34 ± 11	27 ± 9	36 ± 12	30 ± 9	38 ± 13	33 ± 10	40 ± 14	34 ± 11	42 ± 15	35± 11	43 ± 16	37 ± 12	44 ± 17	38 ± 13	45 ± 18	39 ± 14	—	—
801	1000	—	—	—	—	34 ± 12	28 ± 9	38 ± 12	33 ± 10	40 ± 13	35 ± 10	42 ± 14	38 ± 11	44 ± 15	38 ± 12	46 ± 16	39 ± 12	43 ± 17	41 ± 13	51 ± 18	41 ± 14	12 ± 19	41 ± 15	53 ± 20	41 ± 16
1001	1250	—	—	—	—	40 ± 13	35 ± 10	43 ± 13	38 ± 11	45 ± 14	39 ± 11	47 ± 15	41 ± 12	49 ± 16	41 ± 13	51 ± 17	43 ± 13	53 ± 18	44 ± 14	55 ± 19	44 ± 15	57 ± 20	44 ± 16	58 ± 21	45 ± 17
1251	1600	—	—	—	—	—	—	49 ± 14	42 ± 12	52 ± 15	44 ± 15	53 ± 13	44 ± 13	54 ± 17	45 ± 14	56 ± 18	46 ± 14	58 ± 19	46 ± 15	61 ± 20	47 ± 16	62 ± 21	47 ± 17	63 ± 22	47 ± 18

NOTE — In case of hollow blanks allowances on d_1 are to be taken 50% more than that on d.

TABLE 6 MACHINING ALLOWANCE AND FORGING TOLERANCES FOR FREE-FORGED

(where : $h \leq d$, $d_1 \geq 1/3\ d$)

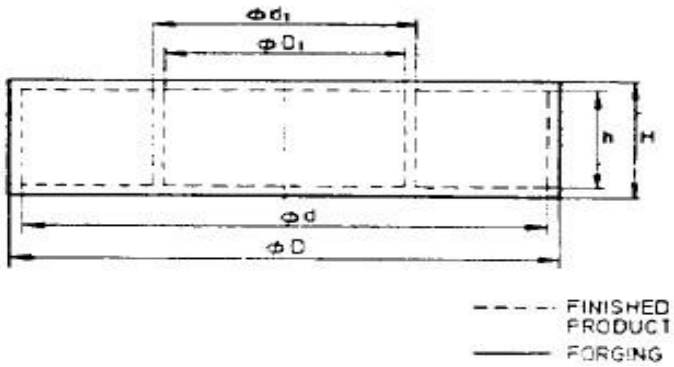

All dimensions in millimetres.

HEIGHT '*h*' OF THE FINISHED PRODUCT

OUTSIDE DIAMETER '*d*' OF THE FINISHED PRODUCT	OVER→ UP TO → AND INCLUDIGN	— 63	63 100	100 160	160 200	200 250	250 315	315 400	400 500	500 630	630 800	800 1010	1010 1260	1260 1550

ALLOWANCE ON

From	To	*d*, d_1	*h*	*d*, d_1	*h*	*d*, d_1	*h*	*d*, d_1	*h*	*d*, d_1	*h*	*d*, d_1	*h*	*d*, d_1	*h*	*d*, d_1	*h*	*d*, d_1	*h*	*d*, d_1	*h*	*d*, d_1	*h*	*d*, d_1	*h*	*d*, d_1	*h*
63	100	—	—	8 ± 3	7 ± 2	—	—	—	—	—	—	—	—	—	—	—	—	—	—	—	—	—	—	—	—	—	—
101	160	10 ± 3	9 ± 2	11 ± 3	9 ± 2	12 ± 4	10 ± 3	—	—	—	—	—	—	—	—	—	—	—	—	—	—	—	—	—	—	—	—
161	200	11 ± 3	9 ± 2	13 ± 4	10 ± 3	15 ± 5	11 ± 4	16 ± 5	12 ± 4	—	—	—	—	—	—	—	—	—	—	—	—	—	—	—	—	—	—
201	250	13 ± 5	10 ± 3	15 ± 5	10 ± 3	16 ± 6	12 ± 4	18 ± 6	14 ± 5	20 ± 7	16 ± 6	—	—	—	—	—	—	—	—	—	—	—	—	—	—	—	—
251	315	14 ± 6	10 ± 3	16 ± 6	11 ± 4	18 ± 7	13 ± 5	20 ± 7	15 ± 5	22 ± 8	17 ± 6	22 ± 8	19 ± 7	—	—	—	—	—	—	—	—	—	—	—	—	—	—
316	400	18 ± 6	12 ± 4	20 ± 6	13 ± 4	20 ± 7	15 ± 5	22 ± 7	17 ± 5	24 ± 8	19 ± 6	26 ± 9	21 ± 7	30 ± 10	25 ± 8	—	—	—	—	—	—	—	—	—	—	—	—

401	500	22 ± 7	14 ± 5	24 ± 7	16 ± 5	26 ± 8	20 ± 6	26 ± 8	22 ± 6	28 ± 9	23 ± 7	30 ± 10	25 ± 8	35 ± 10	30 ± 8	40 ± 12	35 ± 10	—	—	—	—	—	—	—	—	—	—
501	630	—	—	28 ± 9	20 ± 6	33 ± 9	20 ± 7	34 ± 10	28 ± 8	35 ± 11	28 ± 9	36 ± 11	30 ± 9	40 ± 12	35 ± 10	43 ± 14	36 ± 12	—	—	—	—	—	—	—	—	—	—
631	800	—	—	34 ± 10	28 ± 9	36 ± 11	30 ± 9	37 ± 11	32 ± 10	39 ± 12	33 ± 10	40 ± 12	34 ± 10	42 ± 13	35 ± 10	44 ± 13	37 ± 11	47 ± 14	40 ± 12	—	—	—	—	—	—	—	—
801	1000	—	—	36 ± 11	30 ± 9	38 ± 11	32 ± 10	40 ± 12	34 ± 10	42 ± 13	35 ± 11	44 ± 13	37 ± 11	46 ± 14	39 ± 12	48 ± 14	41 ± 12	51 ± 15	43 ± 13	54 ± 16	47 ± 14	—	—	—	—	—	—
1001	1250	—	—	44 ± 13	35 ± 11	44 ± 13	37 ± 11	45 ± 14	38 ± 11	47 ± 14	39 ± 12	49 ± 14	41 ± 12	51 ± 15	43 ± 13	53 ± 16	45 ± 13	56 ± 17	47 ± 14	58 ± 17	49 ± 14	61 ± 18	52 ± 15	—	—	—	—
1251	1600	—	—	—	—	49 ± 14	41 ± 12	50 ± 15	42 ± 13	51 ± 15	43 ± 13	53 ± 15	46 ± 13	56 ± 17	47 ± 14	58 ± 17	49 ± 14	62 ± 18	52 ± 15	64 ± 19	54 ± 16	67 ± 20	57 ± 17	70 ± 21	61 ± 18	—	—
1601	2000	—	—	—	—	—	—	57 ± 17	48 ± 14	58 ± 17	49 ± 14	59 ± 18	50 ± 14	61 ± 18	51 ± 15	64 ± 19	53 ± 16	67 ± 20	56 ± 17	72 ± 22	61 ± 18	76 ± 23	65 ± 19	80 ± 24	68 ± 20	—	—
2001	2500	—	—	—	—	—	—	—	—	63 ± 19	52 ± 15	65 ± 19	53 ± 16	67 ± 20	55 ± 16	70 ± 20	58 ± 17	74 ± 22	62 ± 18	78 ± 24	68 ± 20	83 ± 28	73 ± 22	88 ± 26	78 ± 24	—	—
2501	3200	—	—	—	—	—	—	—	—	72 ± 22	60 ± 18	73 ± 22	61 ± 18	75 ± 23	62 ± 18	78 ± 24	65 ± 19	81 ± 24	68 ± 20	87 ± 26	76 ± 24	92 ± 28	82 ± 24	99 ± 30	88 ± 26	—	—
3201	4000	—	—	—	—	—	—	—	—	—	—	81 ± 24	67 ± 20	83 ± 24	69 ± 20	86 ± 20	72 ± 22	89 ± 27	76 ± 22	95 ± 29	79 ± 24	99 ± 30	85 ± 26	105 ± 32	96 ± 29	—	—
4001	5000	—	—	—	—	—	—	—	—	—	—	—	—	92 ± 28	77 ± 24	95 ± 29	80 ± 24	97 ± 29	82 ± 24	100 ± 30	85 ± 26	102 ± 31	91 ± 28	105 ± 32	94 ± 29	109 ± 33	100 ± 30

TABLE 7 ADDITIONAL MACHINING ALLOWANCE FOR FREE-FORGED THIN WALLED RINGS All dimensions in millimetres. (Over the Allowance for Ring)								
OUTSIDE DIAMETER 'd' OF THE FINISHED PRODUCT		WALL THICKNESS OF THE PRODUCT						
From	To	Over → UP TO AND → INCLUDING	— 4	4 6.3	6.3 10	10 16	16 25	25 40
			ADDITIONAL MACHINNG ALLOWANCE, PERCENT When h≤d, $d_1 \geq \frac{1}{3}$ d					
63	100		40	30	—	—	—	—
101	160		50	30	20	—	—	—
161	200		50	40	30	20	—	—
201	250		50	40	30	20	—	—
251	315		60	50	40	30	20	—
316	400		60	50	40	30	20	—
401	500		70	60	50	40	30	20
501	630		70	60	50	40	30	20

3.2 Eccentricity Allowance — Additional machining allowance has to be provided to take care of the eccentricity between the step.

3.2.1 In case of shafts where d_1/d_2 or d_2/d_3 (Fig 2) ≥1.6 and 0.8 $d1$ < l <8 d_1, provision for eccentricity allowance has to be considered in the sections where the condition satisfies.

Eccentricity allowance = (d_1-d_2) 0.05 or (d_2-d_3) 0.03

3.2.1.1 In case of multistepped shafts this allowance has to considered for each step where the above condition satisfies and the maximum of the eccentricity allowance to be provided on sections by the technologist keeping in view the economics of material and process.

3.2.2 In case of shafts where l > 8 d_1 and d_1/d_2/ or d_1/d_3 > 1.6 eccentricity allowance has to be provided as per Fig.1.

4. SHAPE OF FORGING

4.1 Stepped Shafts - *See* Fig .3 .

4.1.1 *Minimum Height of Steps*

$$\boldsymbol{H}\text{min} = (T_L + Tu)\left(1-\frac{l2}{2L}\right) \geq 5 \text{ mm for } D_1 < 100, \text{ and}$$

$$\geq 10 \text{ mm for } D_1 \geq 100$$

Where

T_L = lower tolerance, and

Tu = upper tolerance.

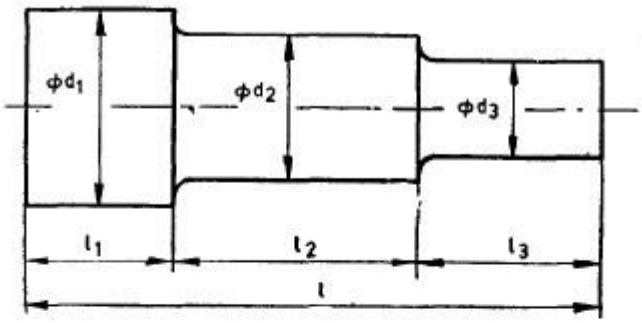

2A Stepped Shaft

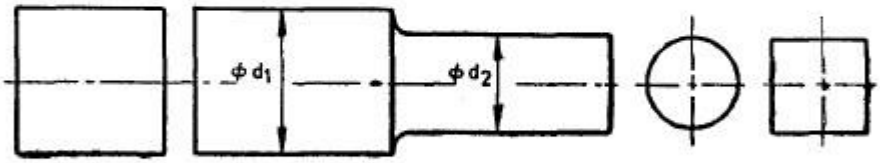

2B Flanged Shaft

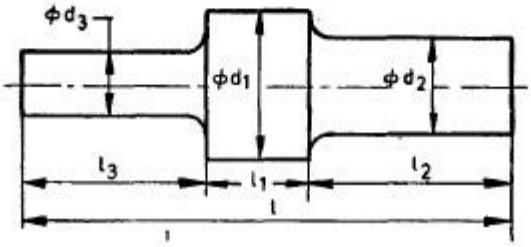

2C Necked Shaft

NOTE – Dimensions indicate machined size only.

FIG. 2 FIXING OF FORGING ALLOWANCE AND TOLERANCE ACCORDING TO THE SHAPE OF FORGINGS

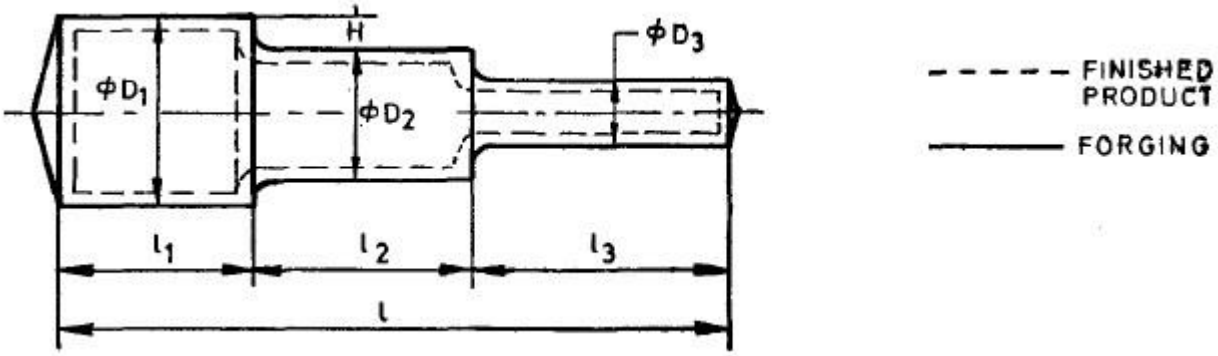

NOTE – After providing allowances and tolerances as per 3.1 and 3.2 the above forging sketch is prepared.

FIG. 3 STEPPED SHAFT

4.1.2 *Maximum Range of Steps*

$$\frac{D1}{D2} \leq 2.5;\ \frac{D2}{D3} \leq 2.5;\ \frac{D1}{D3} \leq\ 4$$

In case the ration of steps is more than the permissible maximum ratio, suitable technological allowance has to be provided to bring the ratio within limit.

4.1.3 *Minimum Length of End Step*

$l_3$min=0.4 $\frac{D_2^3}{D_3^2} \geq 0.1l \geq \frac{1}{2}$ width of pallet

4.1.4 *Minimum Distance Between Steps*

a) $l_{2\min} = 1.2\ \frac{D1-D2}{3} \geq 50 \geq \frac{l3}{2}$

b) $l_2 D_2^2 + l_3 D_3^2 \geq 0.4 D_1^3$

4.2 Flanged Shaft (*See* Fig. 4)

Where a) $\frac{DE}{D1}$ or $\frac{DM}{D1} \geqslant 1.5$ but $\leqslant 2.5$, and

b) $L_E < 0.5D_E$ or $L_M < 0.5\ D_M$

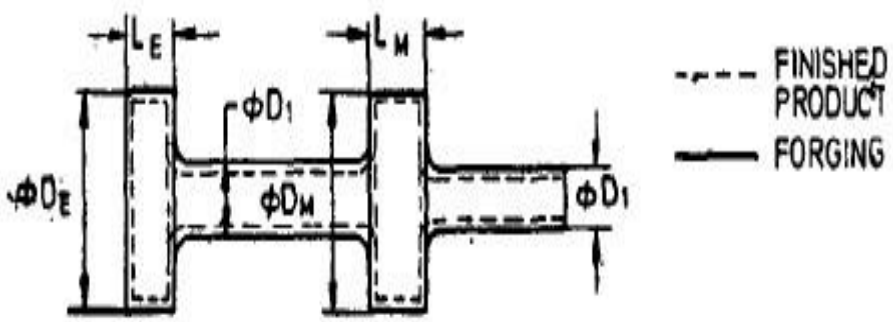

FIG.4 FLANGED SHAFT

4.2.1 *Minimum Width of End Flange*

$$L_{E\min} = \frac{DE-D1}{2} + 0.07D_E \geqslant 70\text{mm}$$

4.2.2 *Minimum Width of Middle Flange*

$$L_{M\min} = [\frac{DM-D1}{2} + 0.07D_M]\ 0.7 \geqslant 70\ \text{mm}$$

4.3 Necked Shaft (*see* Fig.5)

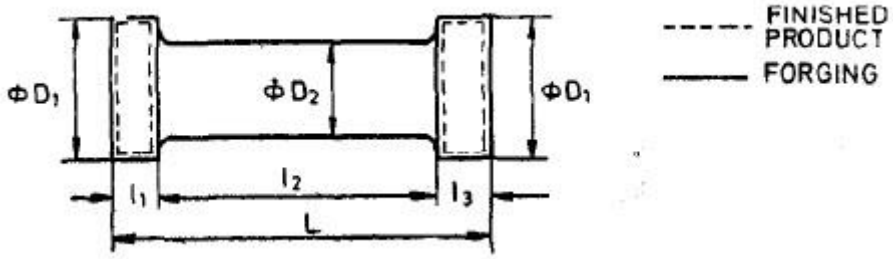

FIG. 5 NECKED SHAFT

$$D_2\text{min} = D_1\sqrt{\frac{w_{\mathbb{P}}}{l_2}}$$

Where

Wp = width of pallet, and

D_l = smaller of the end diameters of the neck in case the flange diameters are not equal.

In case $D_2 < D_2\text{min}$, technological allowance has to be provided.